Auxiliary Light Wiring 12 Volt
operated by vehicle high low beam switch

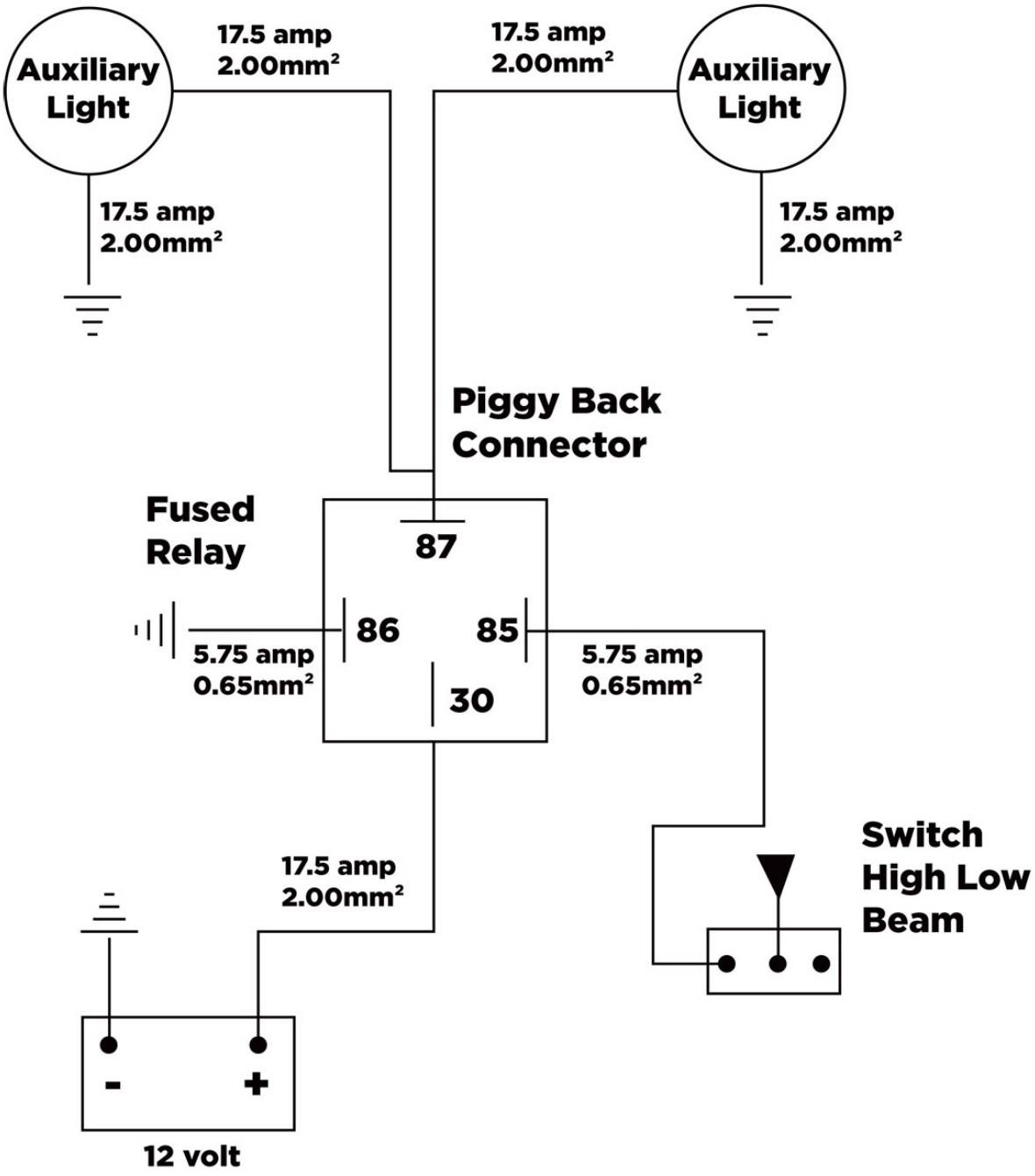

For driving, fog or work lights.

Extreme 4x4 does not accept any responsibility for parts, which are not fitted correctly.

Always drive your vehicle according to the prevailing conditions and your own driving ability.

Extreme 4x4 Limited
Durite Works
Valley Road
Dovercourt
Essex CO12 4RX
England

Tel: +44 (0)1255 411411
Fax: +44 (0)1255 508787
E-mail: sales@extreme4x4.co.uk
Web: www.extreme4x4.co.uk

Registered in England at address shown No. 6903538